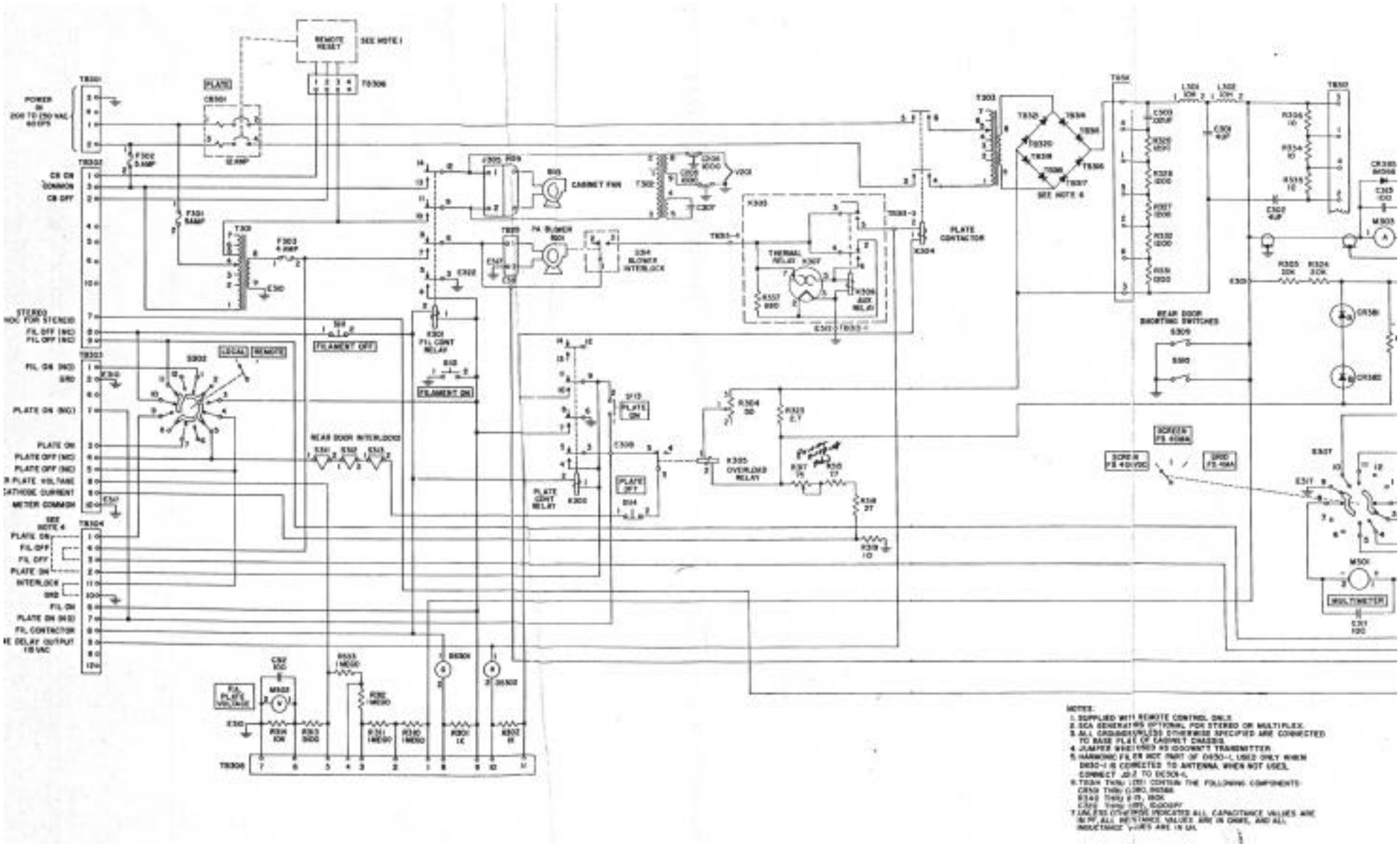


NOTES:

1. SUPPLIED WITH REMOTE CONTROL ONLY.
2. SCA GENERATOR OPTIONAL FOR STEREO OR MULTIPLEX.
3. ALL GROUNDS UNLESS OTHERWISE SPECIFIED ARE CONNECTED TO BASE PLATE OF CABINET CHASSIS.
4. JUMPER WHEN USED AS 1000WATT TRANSMITTER.
5. HARMONIC FILTER NOT PART OF DX50-L USED ONLY WHEN DX50-L IS CONNECTED TO ANTENNA WHEN NOT USED, CONNECT J312 TO DC304-4.
6. TB304 THRU TB311 CONTAIN THE FOLLOWING COMPONENTS:
   CR301 Thru CR310, IN4008.
   R340 Thru R315, 1K0K.
   C301 Thru C311, 1000pF.
7. UNLESS OTHERWISE INDICATED ALL CAPACITANCE VALUES ARE IN PF, ALL RESISTANCE VALUES ARE IN OHMS, AND ALL INDUCTANCE VALUES ARE IN UH.