SECTION V
ILLUSTRATIONS

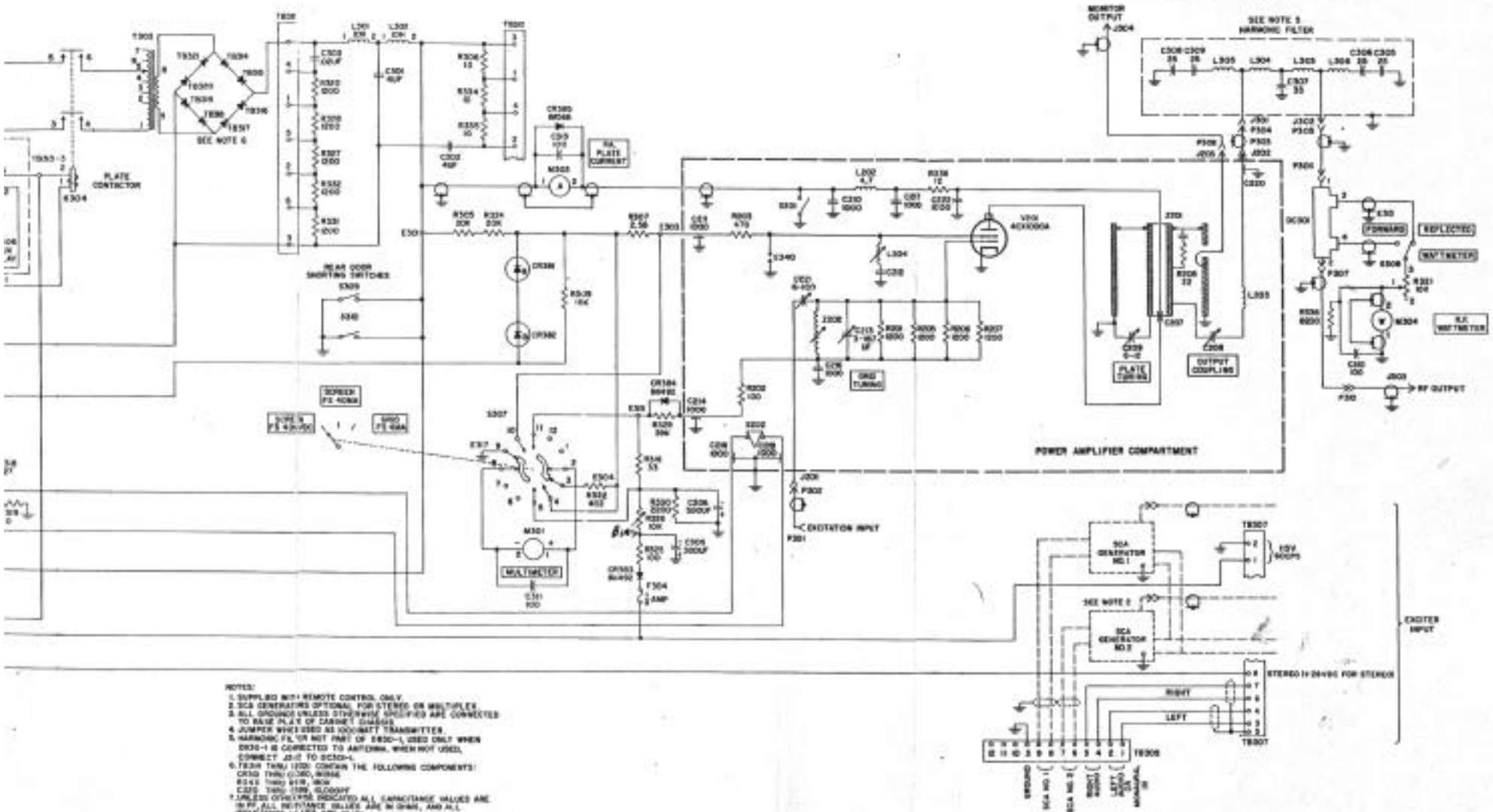

NOTES:
1. SUPPLIED WITH REMOTE CONTROL ONLY.
2. SCA GENERATORS OPTIONAL FOR STEREO OR MULTIPLEX.
3. ALL GROUNDS UNLESS OTHERWISE SPECIFIED ARE CONNECTED TO BASE PLATE OF CABINET CHASSIS.
4. JUMPER WIRE USED AS 1000-WATT TRANSMITTER.
5. HARMONIC FILTER NOT PART OF D830-1, USED ONLY WHEN D830-1 IS CONNECTED TO ANTENNA. WHEN NOT USED, CONNECT J3-2 TO D830-1.
6. T830H THRU T830J CONTAIN THE FOLLOWING COMPONENTS:
   CR30G THRU CR30J, IN3046
   R30G THRU R30J, 1K
   C30G THRU C30J, 0.05UF
7. UNLESS OTHERWISE INDICATED ALL CAPACITANCE VALUES ARE IN PF, ALL RESISTANCE VALUES ARE IN OHMS, AND ALL INDUCTANCE VALUES ARE IN UH.

Figure 5-1. 1000-Watt FM Power Amplifier D830-1, Schematic Diagram